10 Main driving unit

NO.	PARTS CODE	PRICE RANK	NEW MARK	PART RANK	DESCRIPTION
1	PGiDM0104QSZZ	AK		C	Harness guide
2	XHBSD30P08000	AA		C	Screw(3×8)
3	DHAi-0110QSZ1	AL		C	HL harness
4	DHAi-0327QSZZ	AD		C	HND SOL harness
5	DHAi-0323QSZZ	AC		C	Main motor harness
6	XBBSD40P08000	AA		C	Screw(4×8)
7	RMÖTP0044QSPA	BH	N	B	Main motor
8	PTME-0032QSZ1	AD	N	C	Roller pawl
9	MSPRC1318FCZ1	AA		C	Spring B
10	RPLU-0009QSZ1	AM		B	Solenoid CSA
11	LPLTM0048QSZZ	AF		C	Drive earth plate
12	XRESP40-06000	AA		C	E type ring(E4)
15	PTME-0012QSZZ	AC		C	PS clutch pawl
16	RPLU-0008QSZ1	AM		B	Solenoid PS
17	XBBSD30P04000	AA		C	Screw(3×4)
18	CPLTM0047QS04	AZ	N	C	Main drive plate DUP [AR-M162]
	CPLTM0047QS05	AZ	N	C	Main drive plate DUP [AR-M165/AR-M207]
19	NGERH0010QSZZ	AD		C	Gear(28T)
20	NGERH0009QSZZ	AD		C	Gear(46/16T)
21	NGERH0014QSZZ	AD		C	Gear(30/15T)
22	NGERH0011QSZZ	AD		C	MG gear
23	MSPRC2132FCZ1	AA		C	MG roller spring
24	NCPL-0004FCZZ	AB		C	Coupling B
25	NGERH0052QSZZ	AE		C	Gear(38/18T)
26	NGERH0007QSZZ	AH		C	Gear(68/26T)
27	NGERH0057QSZZ	AE		C	Gear(41T)
28	NGERH0008QSZ5	AH		C	Gear(55/19T)
29	NGERH0059QSZZ	AD		C	Gear(23/27T)
30	NGERH0012QSZZ	AE		C	Gear(20T)
31	NGERH0058QSZZ	AF		C	Gear(21/17T)
32	NGERH0013QSZZ	AG		C	Gear(31/17T)
33	NGERH0016QSZZ	AD		C	Coupling gear(34T)
34	MSPRC0081QSZZ	AB		C	HT ratchet spring
35	NGERH0055QSZZ	AE		C	Ratchet gear(44T)
36	NGERH0056QSZZ	AE		C	Ratchet gear(33T)
37	LX-WZ0314FCZZ	AA		C	Poly slider
38	NGERH0054QSZZ	AD		C	Gear(33/20T)
40	QCNCM0999FCZZ	AC		C	I/F connector
41	XRESP40-06000	AA		C	E type ring(E4) [AR-M162]
42	LX-WZ0002QSZZ	AB		C	PO belt washer [AR-M162]
43	NGERH0053QSZZ	AD		C	Gear [AR-M162]
501	CGERH0011RS51	AE		E	MG gear unit
502	CPLTM0047RS81	BE	N	E	Driving sub unit [AR-M162]
	CPLTM0047RS82	BE	N	E	Driving sub unit [AR-M165/AR-M207]
	(Unit)				
901	CPLTM0047RS61	BL	N	E	Driving unit(Without No.5) [AR-M162]
	CPLTM0047RS62	BL	N	E	Driving unit(Without No.5) [AR-M165/AR-M207]
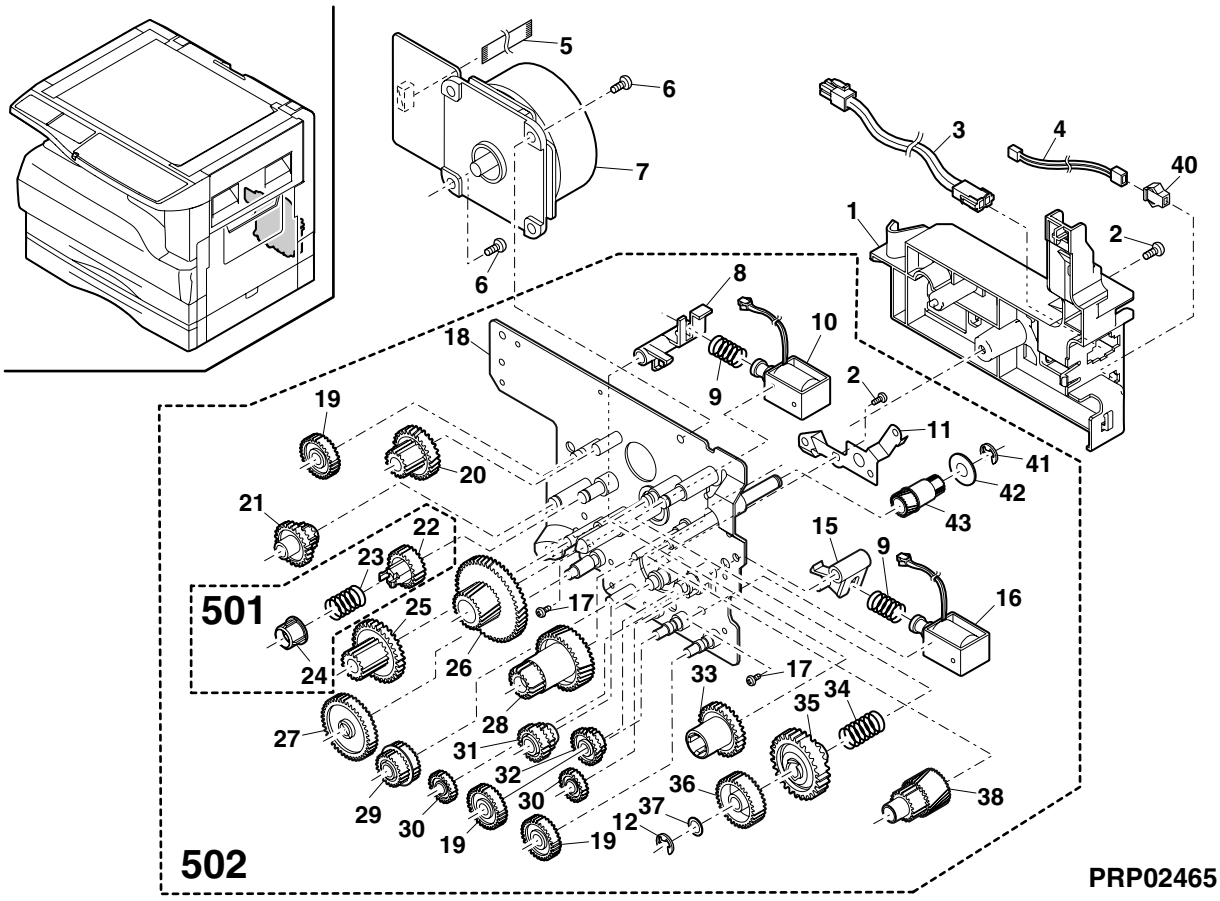
10 Main driving unit